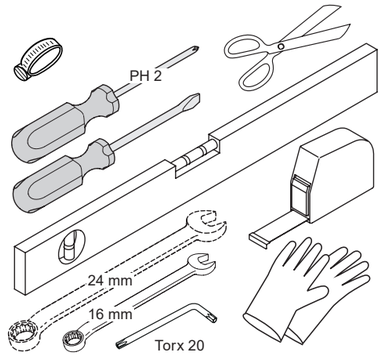


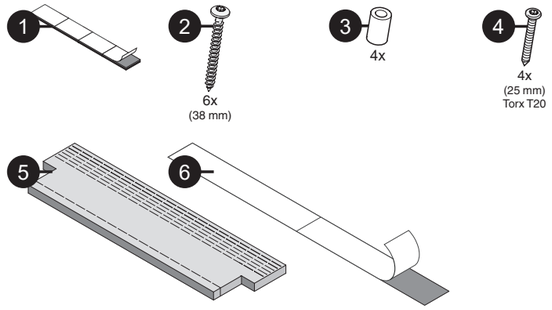


## 1

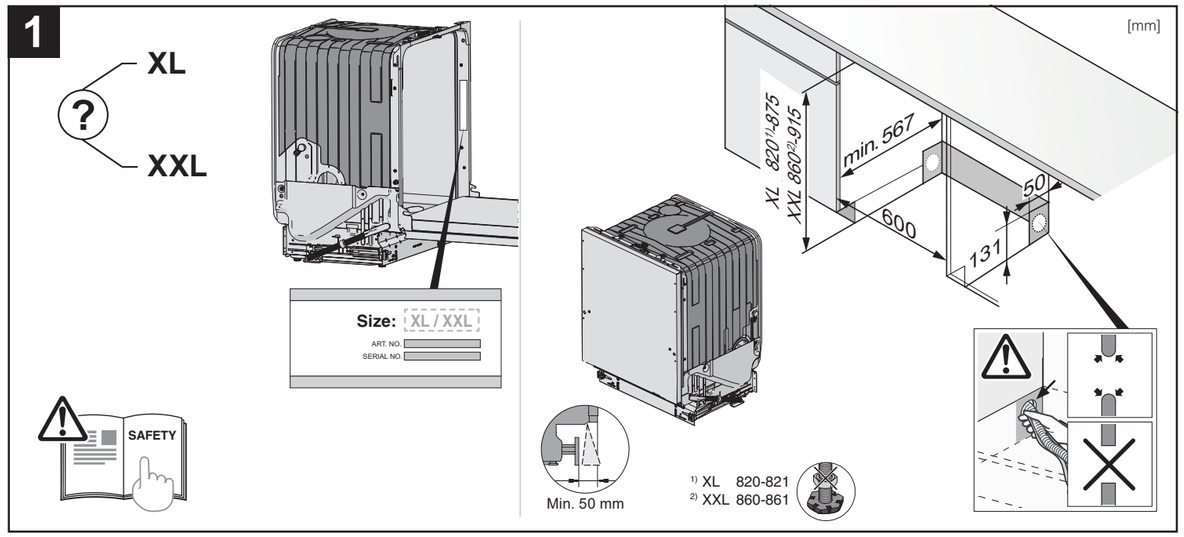


## 2

## 3

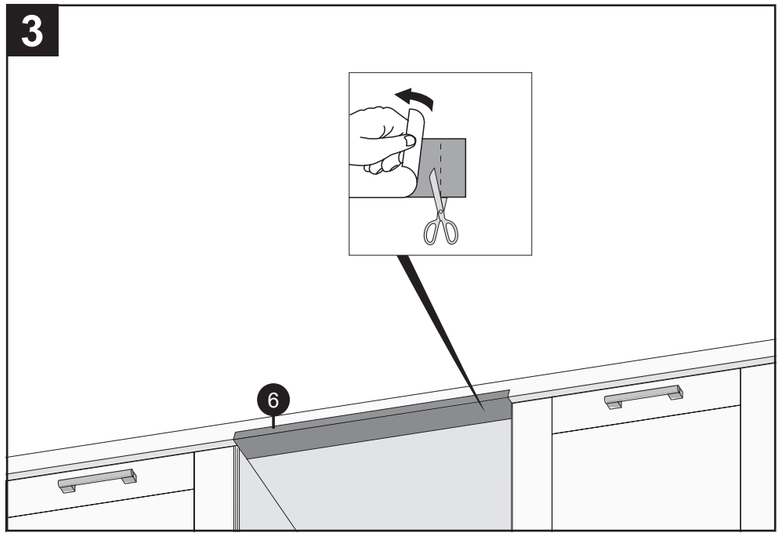


## 4

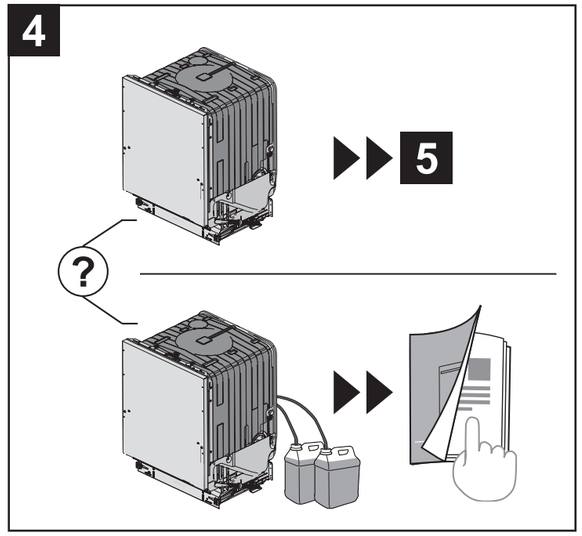


## 5

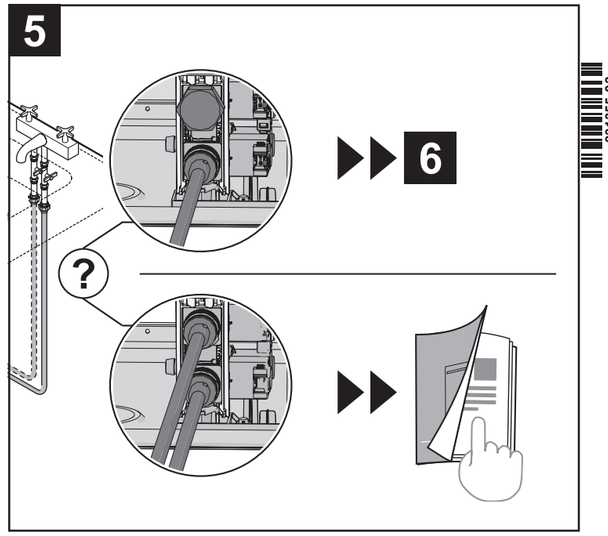


## 6

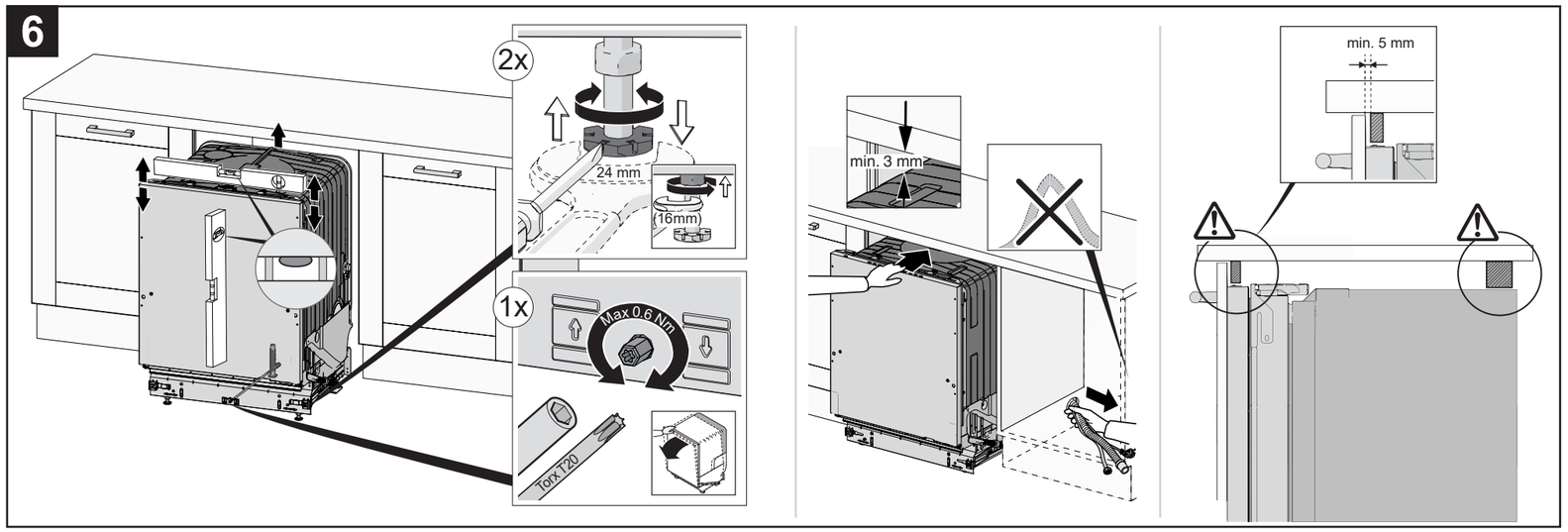


## 7

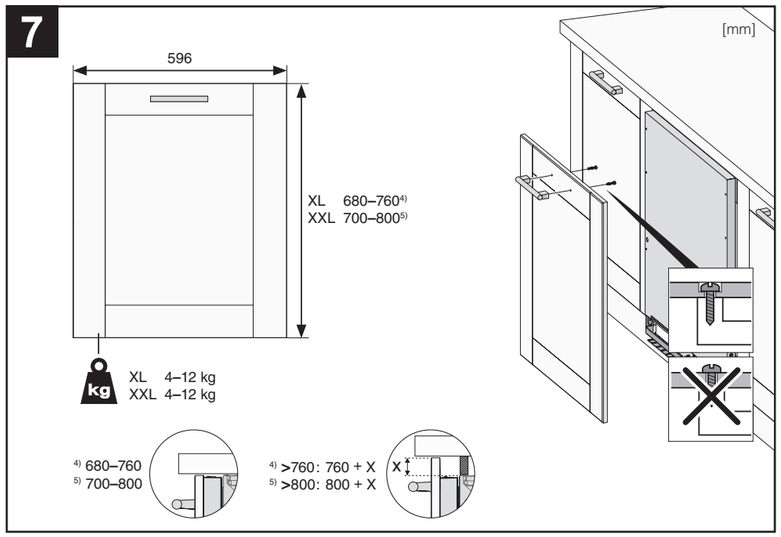


931355-03

We reserve the right to make changes.

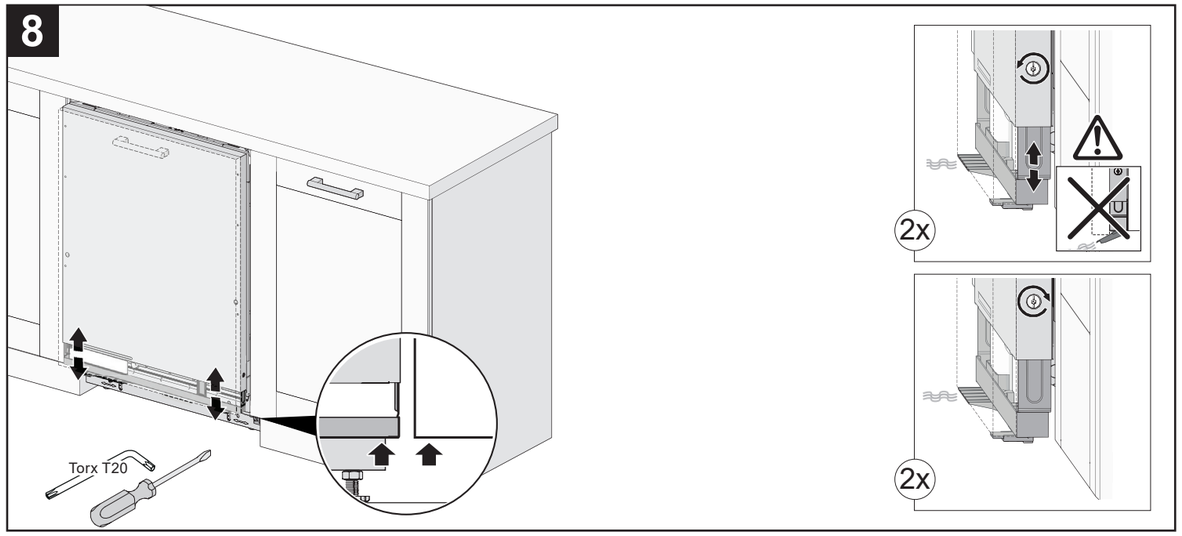
8
Torx T20
2x
2x

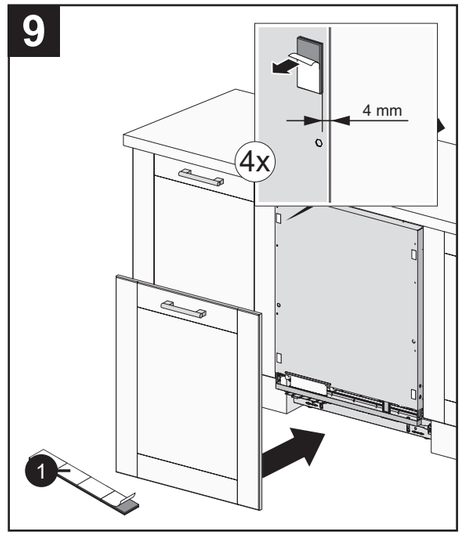
9
4 mm
4x
1

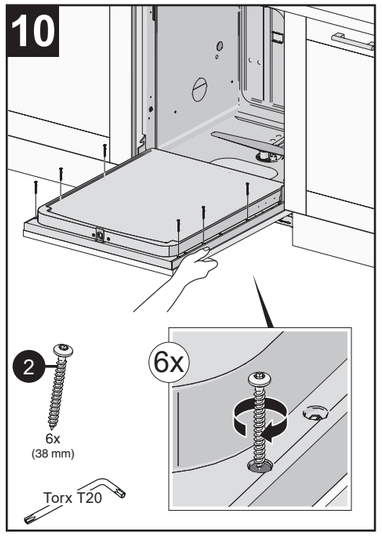
10
2
6x
(38 mm)
Torx T20
6x

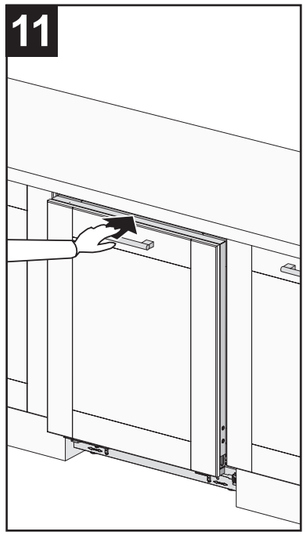
11

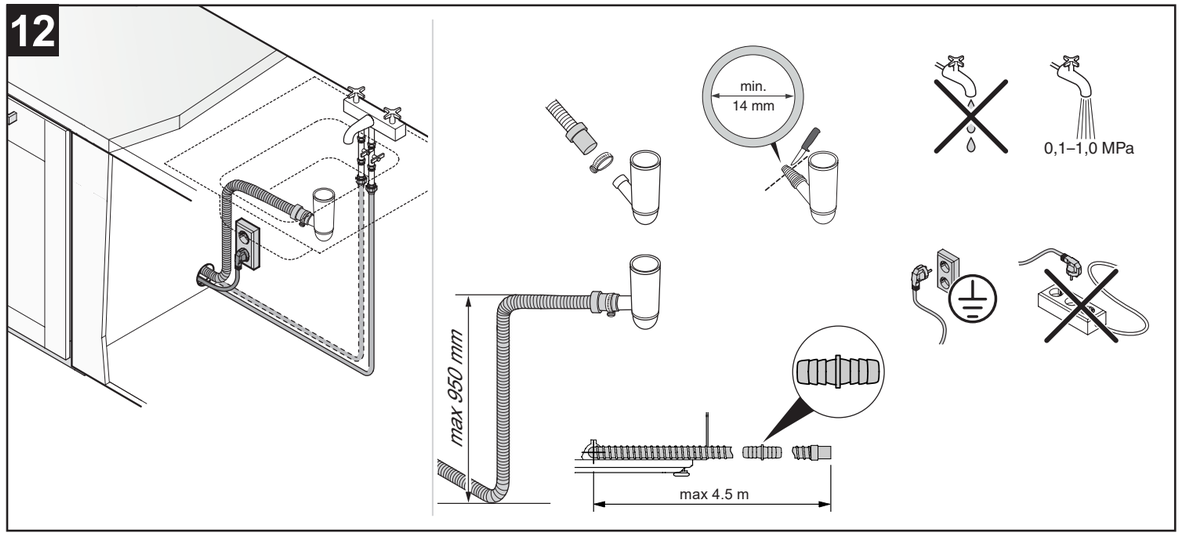
12
min.
14 mm
0,1–1,0 MPa
max 950 mm
max 4.5 m

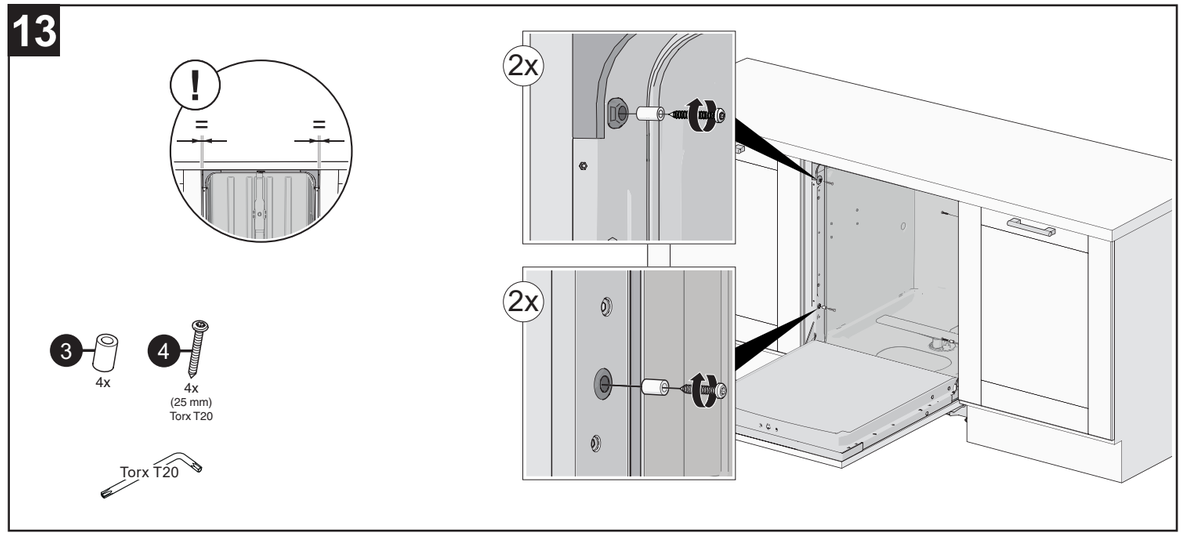
13
!
=
=
3
4x
4
4x
(25 mm)
Torx T20
Torx T20
2x
2x

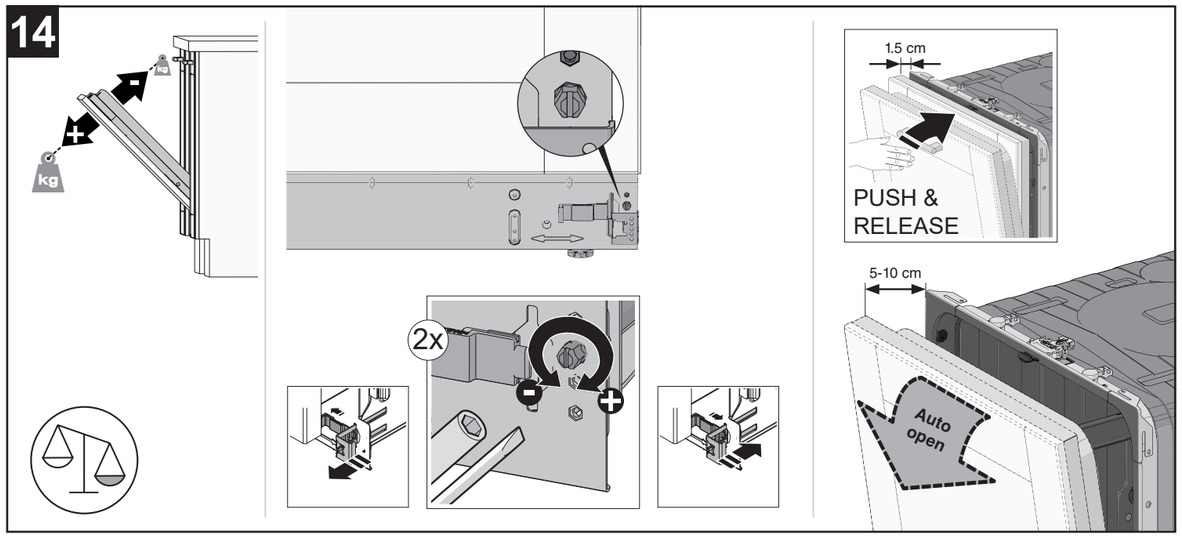
14
kg
kg
2x
1.5 cm
PUSH &
RELEASE
5-10 cm
Auto
open

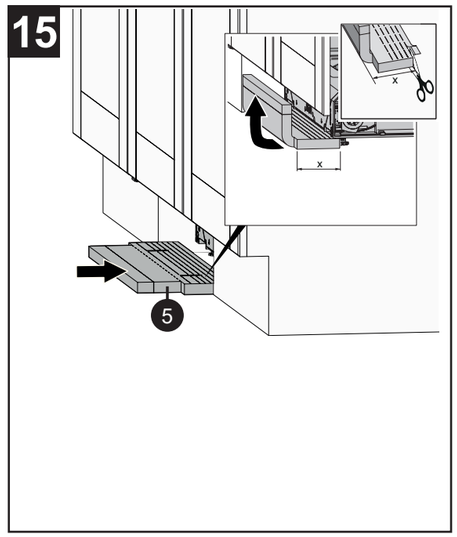
15
x
x
5

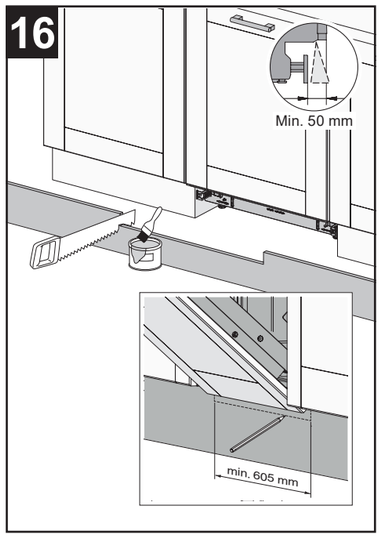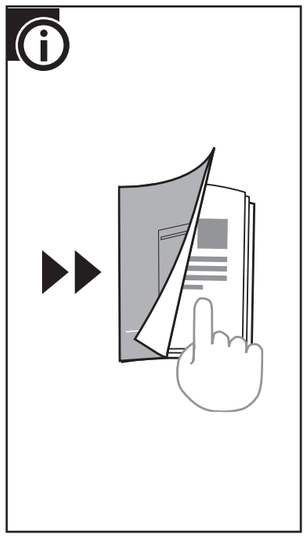
16
Min. 50 mm
min. 605 mm